Development of A High Field Magnet for Neutrino Factory Storage Rings

Ramesh Gupta
Brett Parker
Superconducting Magnet Division

LDRD Project No. 01-79

With additional contributions from:
M. Anerella, J. Escallier, A. Ghosh,
M. Harrison, J. Schmalzle, J. Sondericker, E. Willen

Alternate Magnet Design for a Compact ν Factory Storage Ring

Guiding Principles:

Decay products clear s.c. coils

- Flat coils with open midplane gap

Minimize environmental impact

- High field magnets, efficient design

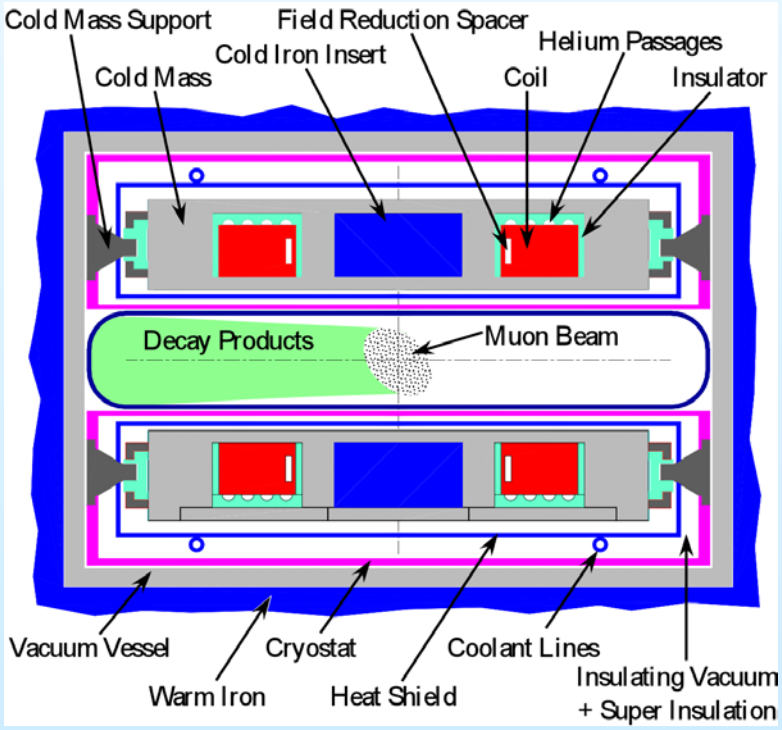

Technical Issues:

Brittle High field superconductors

- Nb_3Sn "React & Wind" Technology

Large Lorentz forces

- Support structure for various configurations

  An integral design for dipole & quadrupole

Large heat leak

Compact cryostat

Tooling design for magnet

Magnet test configuration setup

Past Progress and Future Plans

FY 2001

- ✓ Innovative magnet and machine design concepts developed
- ✓ Initial engineering design for 8T (machine magnet) & 4T (free SC)

FY 2002 (first half)

- ✓ Magnetic design for machine & test magnet (8 T & 4 T) completed
- ✓ Structural analysis for test and machine magnet performed
- ✓ Engineering design of the magnet and cryostat assembly completed
- ✓ Superconducting wire received; cable is being manufactured
- ✓ Tooling design for winding and impregnating coil nearly completed
- ✓ Magnet test setup design completed

FY 2002 (second half)

- ❑ Complete remaining tasks and wind coils

FY 2003 (early part)

- ❑ Test magnet in various configurations to prove the design

Fun Part

Hard Work

More Sweat

Results

Structural Analysis for Machine Magnet (8T)

Finite Element Analysis of the Support Structure

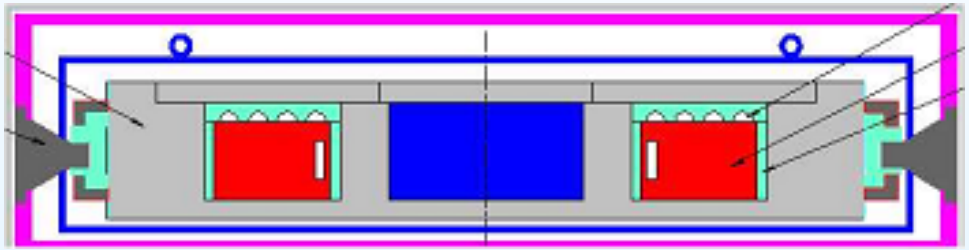

Maximum Deflection in the coil < 10 mil

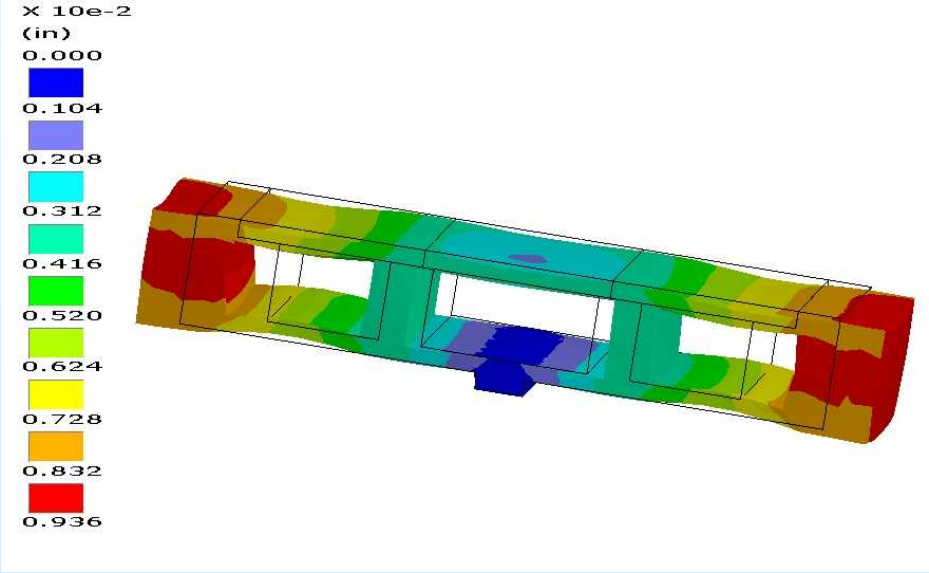

Maximum Stress in S.S. < 50 kpsi

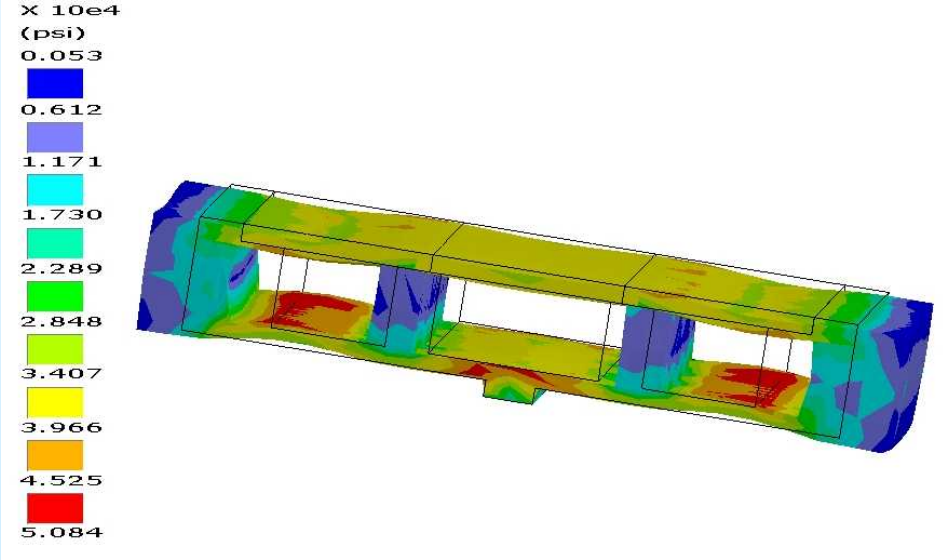

Analysis of Support Key/Post Structural and Thermal Analysis

Attractive (dipole configuration) and repulsive (quadrupole configuration) vertical forces are taken by support keys (posts).

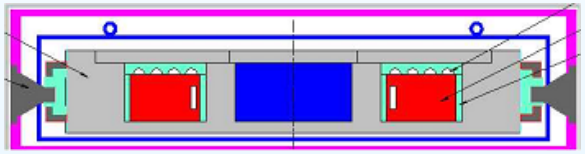

Must balance between heat leak and deflections (after basic design and materials are carefully selected).

Estimated heat load ~ 7 W.

Support keys (posts) are designed for 8 T machine magnet.

However, in 4 T test magnet, the number and length are reduced to test the influence of similar deflections as in 8 T machine magnet.

Max. Stress ~ 80 kpsi

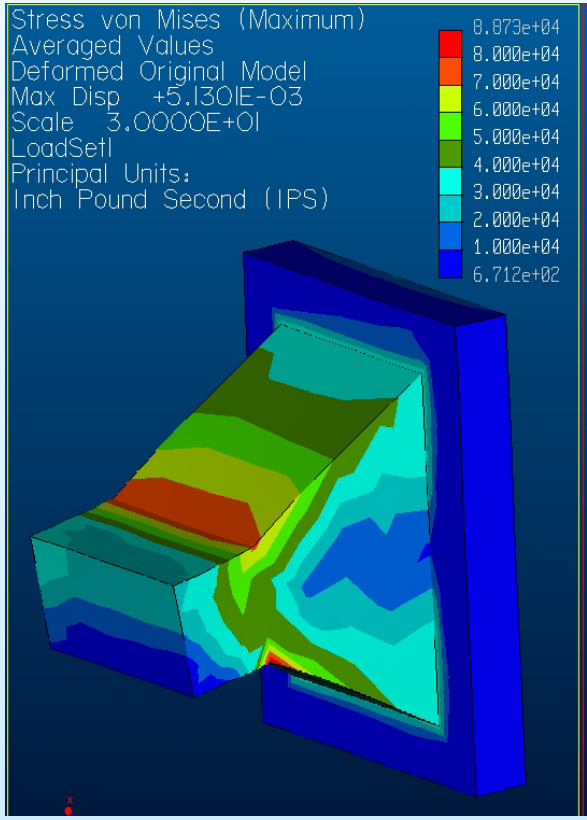

Max. Displacement ~ 5mil

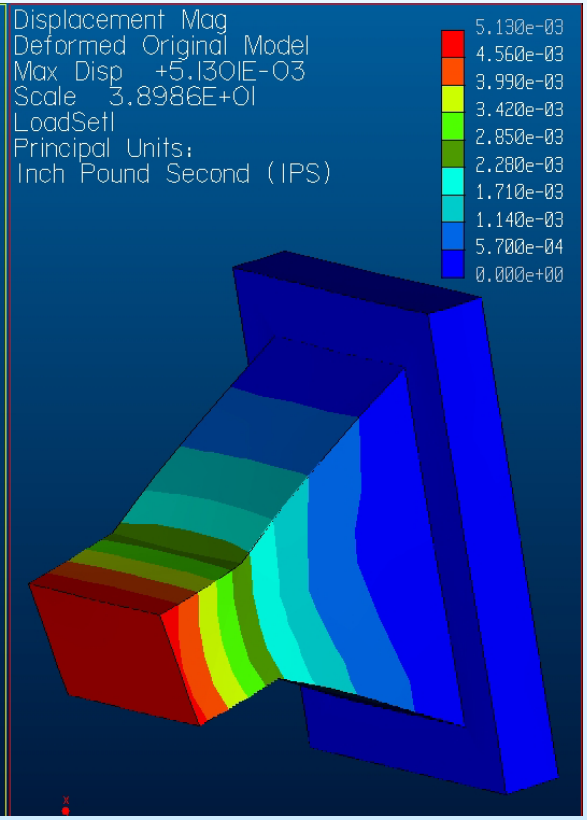

Prototype Coil and Coldmass Assembly

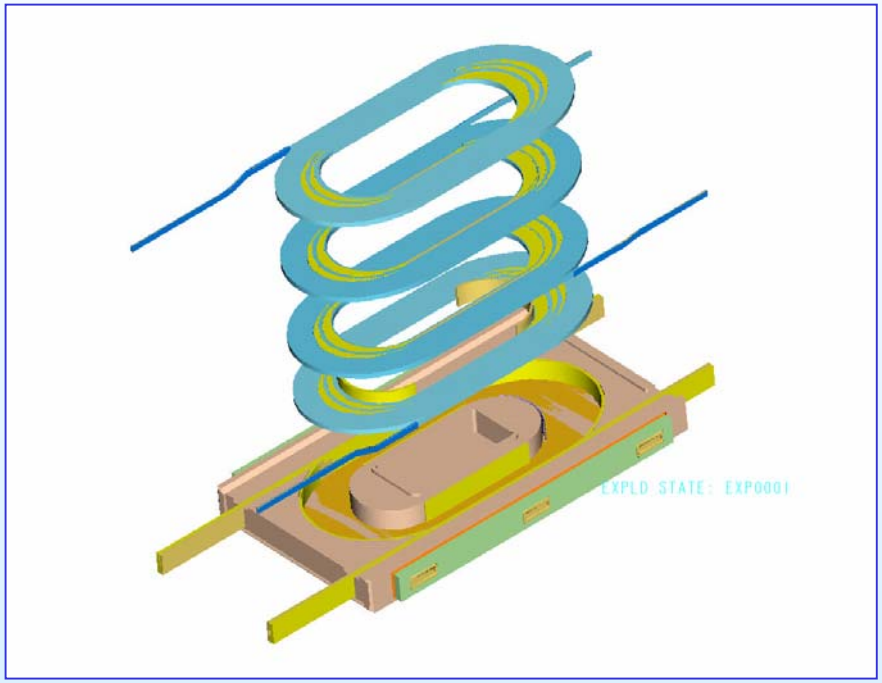

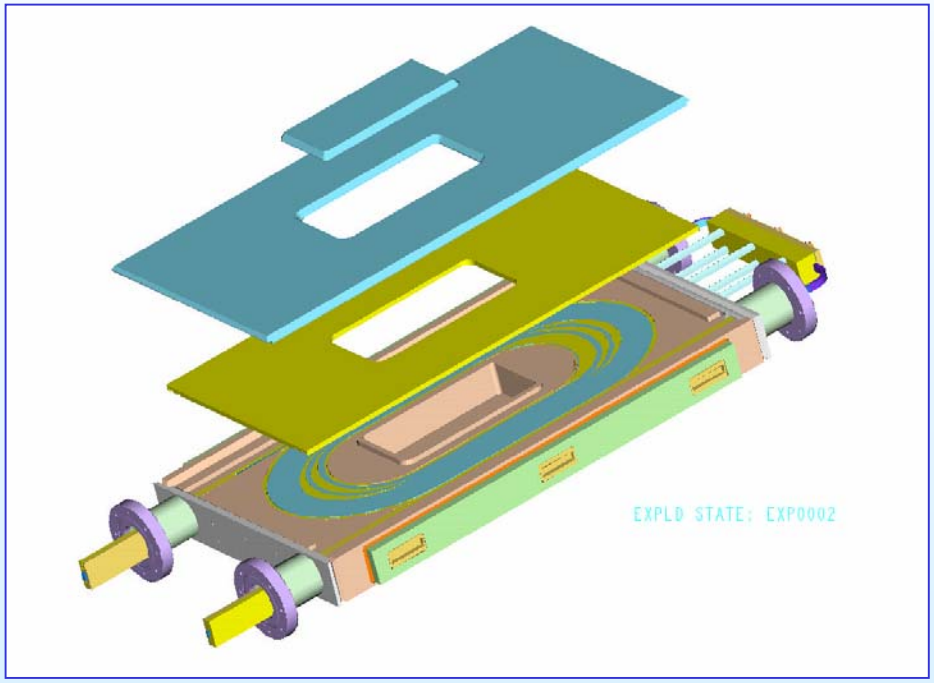

Two double-pancake Nb3Sn coils

(A lot of similarities to 10 turn coil program)

Prototype coldmass

Magnet Test Setup
What Are We Testing and Why?

We are testing the performance under various force conditions!

Magnet system layout in the proposed ν factory storage ring:

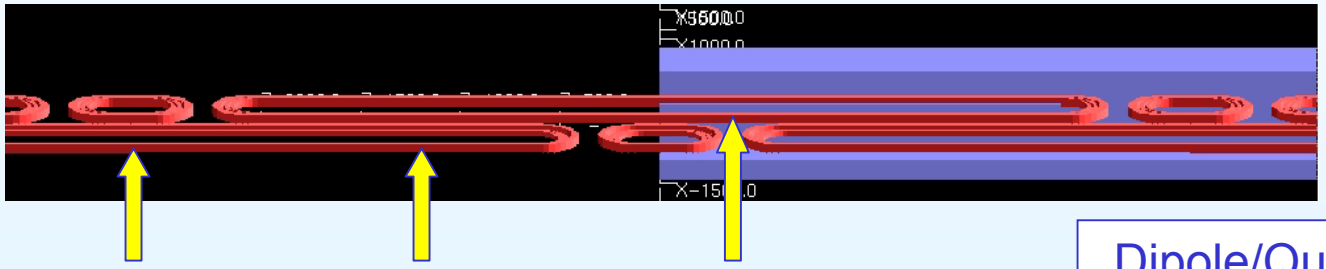

Reverse Coils Skew Quad | **Normal Coils Dipole** | **One Coil 1/2 & 1/2**

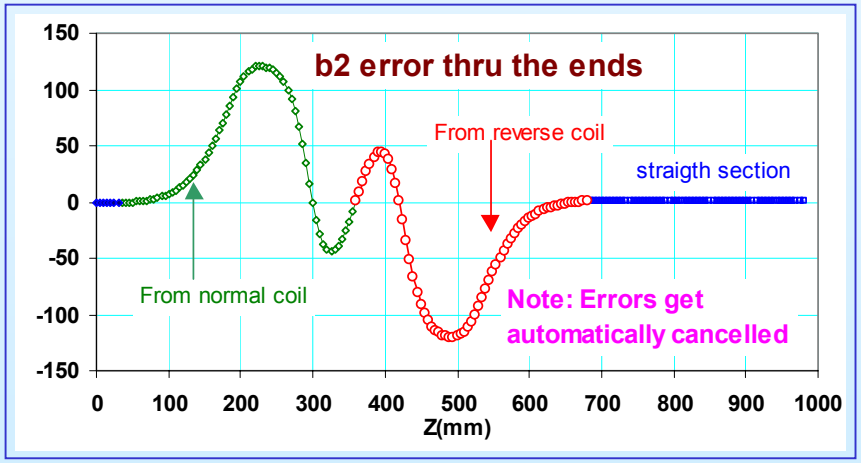

Dipole/Quad test setup (switch relative current direction)

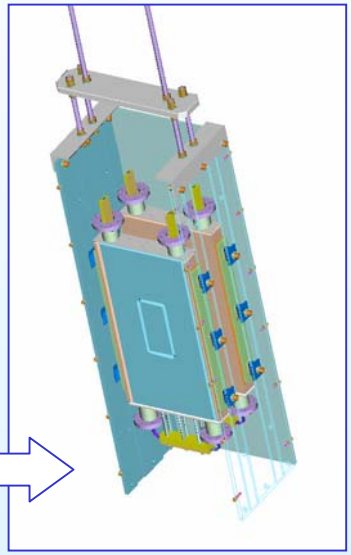

Staggered coil setup

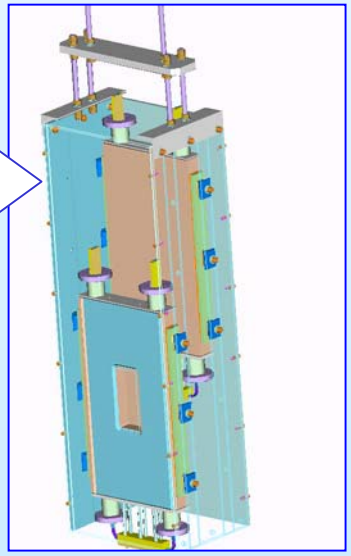

New Magnet System Design

> Good field quality

> Makes storage ring small

Important for BNL site

Test Results from 10-turn Coil Technology Development Magnet Program

Similarities between the test magnet and 10-turn coil program

- ITER Nb_3Sn (brittle) superconductor
- React and wind technology
- Flat racetrack coils
- Bend radius 80 mm Vs. 70 mm
- S.S. 26 cm Vs. 30 cm
- Vacuum impregnation, splice, etc.

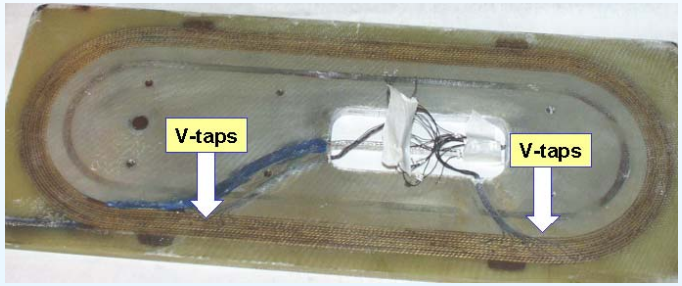

Test Results: Quench performance measurements were limited by power supply. Reached > 85% of short sample. The magnet is now being prepared for another test with high current supply.

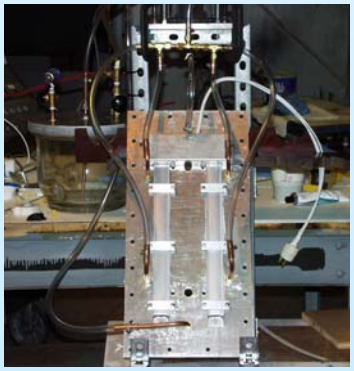

However, the conductor X-section and forces are much larger in the test magnet.

So while we learn a lot from the technology magnet, we build and wait for the results of the test magnet before drawing conclusions!